rev.	revision text	rev.date	rev.by	sgnr. date	sgnr. by
02	general adaptivation	2023-12-14	Rutland	2023-12-14	McNaab
03	center marks changed	2023-01-18	LeeDrive	2023-01-18	McNaab

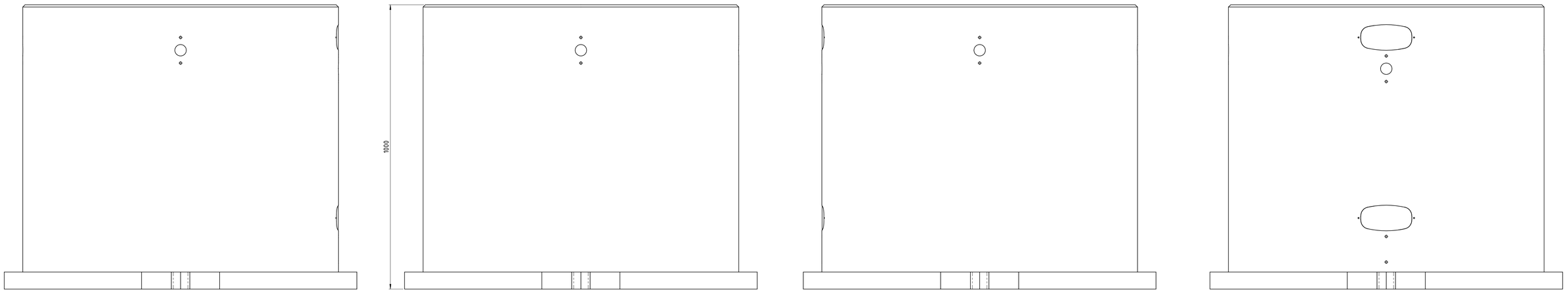

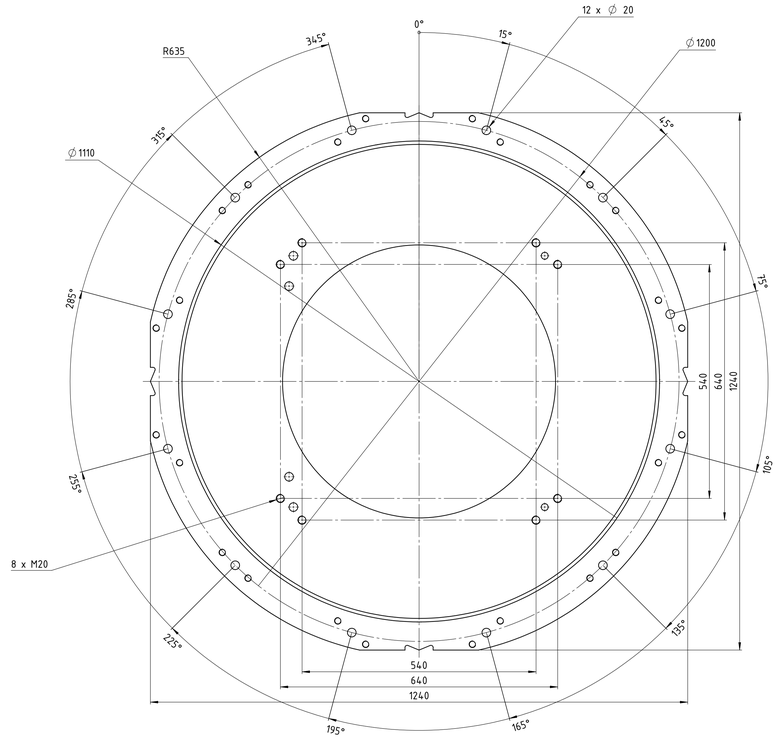

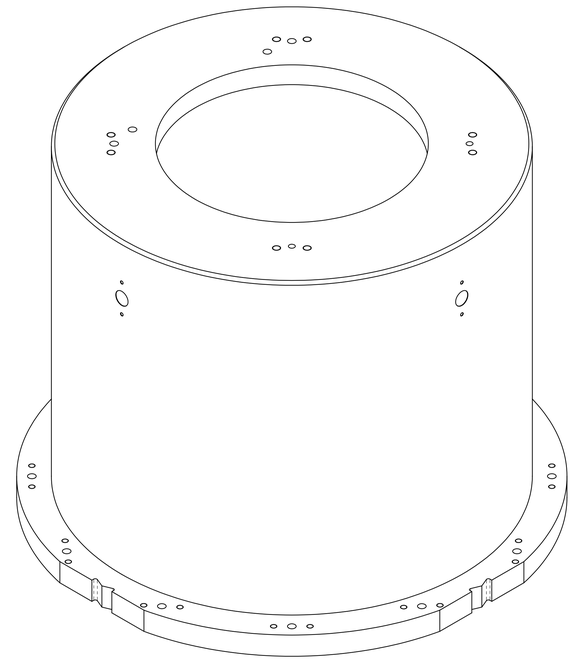

CONFIDENTIAL: The reproduction, distribution and utilization of this document as well as the communication of its contents to others without express authorization is prohibited. Offenders will be held liable for the payment of damages. All rights reserved in the event of the grant of a patent, utility model or design.

where nothing else is indicated	status: Released		
tolerances: DIN ISO 2768-mH	SAP EMEA no:	SAP AH no: 230789	
welding: DIN EN ISO 13920-A			
edges: DIN EN ISO 13715			
0.5 / 0.3 / 0.5	title / description: robot stand R-1000		

YASKAWA
www.yaskawa.eu.com

dimension: 1240x1240x1000 mm		weight: 562,581 kg	
created:	2023-07-19	McNaab	
drawn:	2023-07-19	McNaab	sheet:
approved:	2023-07-19	RaSeid	A0
drawing-no.: 0001060279-100		revision: 03	1.5 / 4/5