Rev.	revision field	rev.date	rev.by	ggrv. date	ggrv. by
01	approved outline	2021-07-09	McNaab	2021-07-09	Kindl.exe
02	general simplification	2021-10-07	Kaldrum	2021-10-06	McNaab
03	increased wall thickness	2021-05-17	McNaab	2021-05-18	Jeschke
04	Center mark and drillings changed	2021-07-16	Gamlake	2021-07-16	McNaab

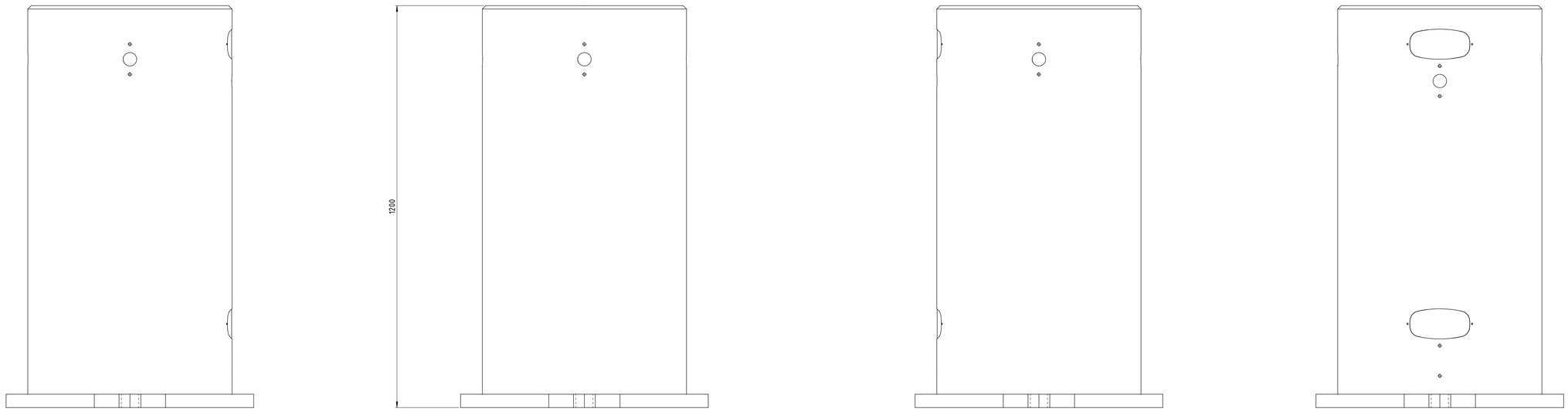

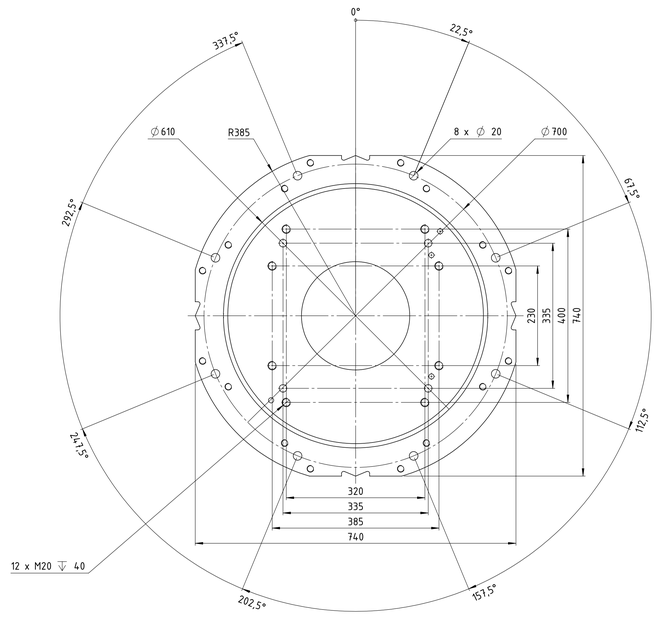

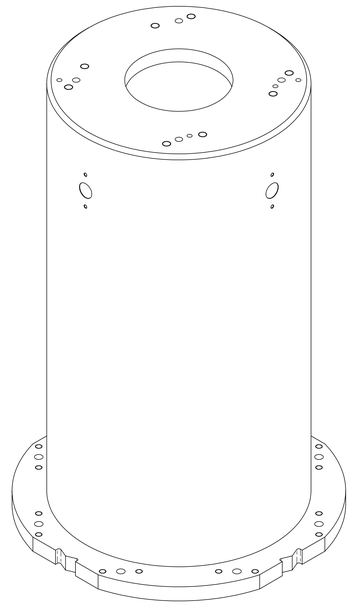

where nothing else is indicated	status: Released		YASKAWA www.yaskawa.eu.com	dimension: 1200x740x740 mm	weight: 251.798 kg
tolerances: DIN ISO 2768-mH welding: DIN EN ISO 13920-A edges: DIN EN ISO 13715	SAP EMEA no: 279112			created: 2021-06-23 McNaab	
				drawn: 2021-06-23 McNaab	sheet: A0
	title / description: robot stand M-1200			approved:	
				drawing-no.: 0000028145-100	revision: 04

CONFIDENTIAL: The reproduction, distribution and utilization of this document as well as the communication of its contents to others without express authorization is prohibited. Offenders will be held liable for the payment of damages. All rights reserved in the event of the grant of a patent, utility model or design.