rev:	revision text:	rev.date:	rev.by:	aprv. date:	aprv. by:
02	general simplification	2023-12-20	KaiGünd	2023-12-20	MicNaeb

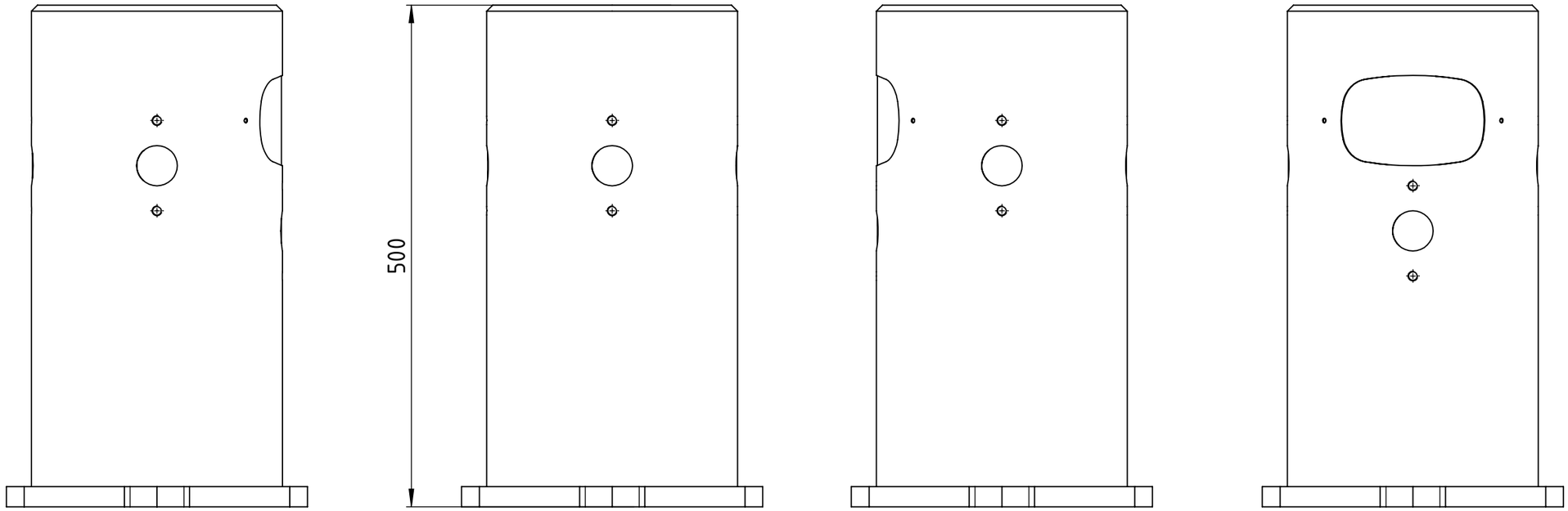

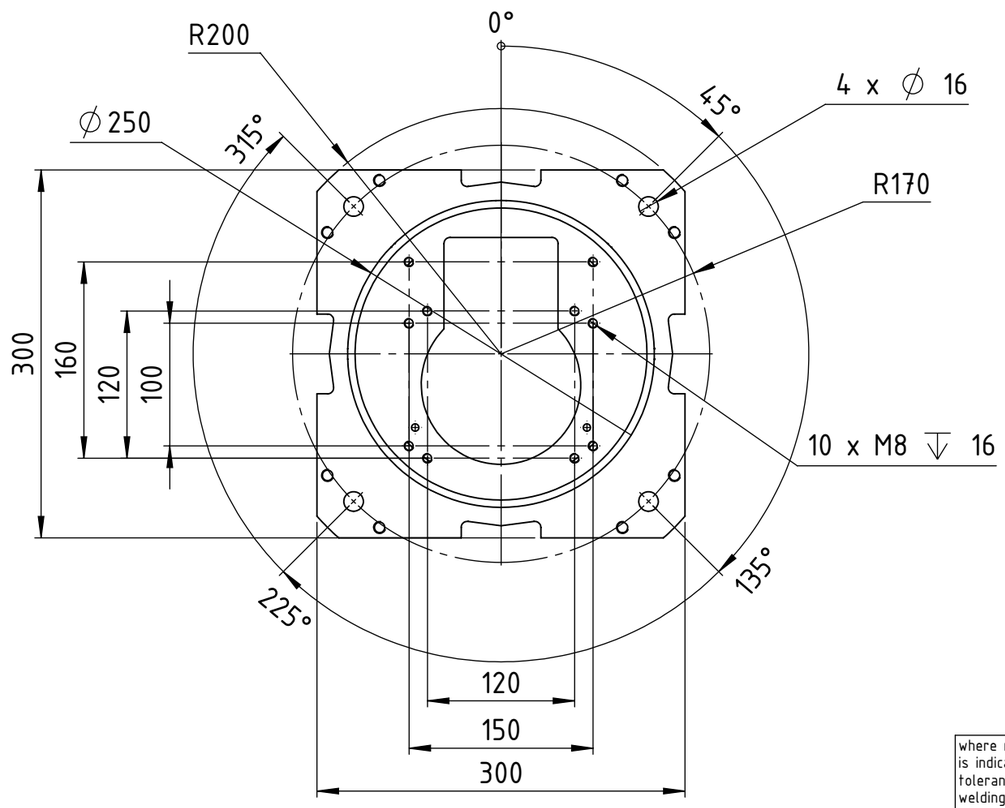

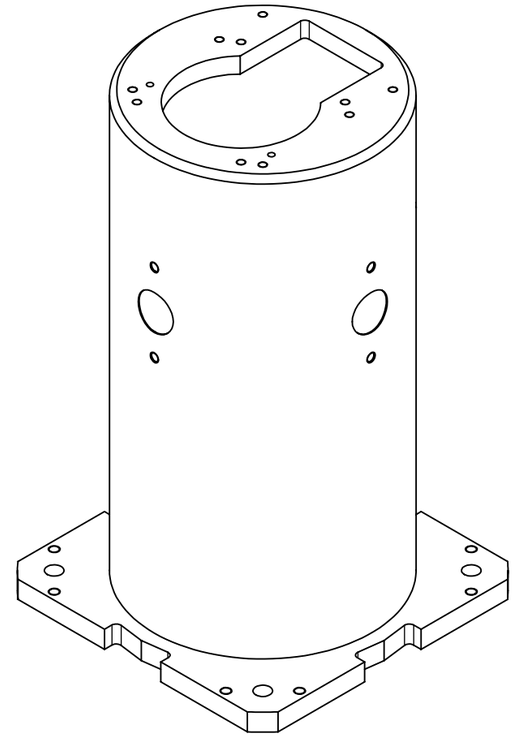

where nothing else is indicated:
tolerances: DIN ISO 2768-mH
welding: DIN EN ISO 13920-A
edges: DIN EN ISO 13715
-0,3
-0,5
+0,3

status: Released
SAP EMEA nr:
SAP AH nr: 230481

title / description:
robot stand
A-500

YASKAWA
www.yaskawa.eu.com

dimension:		weight: 20,495 kg	
created:	2023-07-05	MicNaeb	
drawn:	2023-07-05	MicNaeb	sheet:
approved:	2023-07-06	MarWiss	A3
drawing-nr.: 0001059963-100		revision: 02	1:5 4/5

CONFIDENTIAL! The reproduction, distribution and utilization of this document as well as the communication of its contents to others without express authorization is prohibited. Offenders will be held liable for the payment of damages. All rights reserved in the event of the grant of a patent, utility model or design